BUNN®

TDS3
TDS5
ICD3

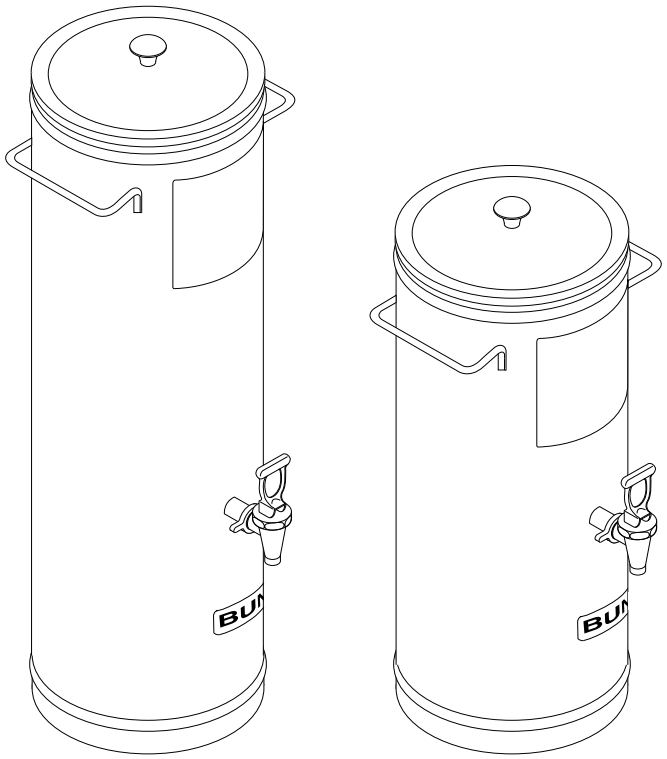

USE & CARE INFORMATION

INTRODUCTION

These dispensers are designed to hold and serve either a three or five gallon batch of iced tea or iced coffee, depending on the model. When proper precautions are followed, tea/coffee may be brewed directly into the dispenser and then transported to a remote serving location. The dispenser must be placed on a sturdy counter or shelf.

NOTE - The TDS3 & ICD3 dispenser weighs approximately 40 pounds when full. The TDS5 weighs approximately 55 pounds when full. **You must be careful when lifting these dispensers. WHEN THE DISPENSER IS HOLDING LIQUID,LIFT THE DISPENSER USING THE HANDLES ONLY. DO NOT LIFT THE DISPENSER FROM THE BOTTOM.**

BUNN-O-MATIC CORPORATION

POST OFFICE BOX 3227
SPRINGFIELD, ILLINOIS 62708-3227
PHONE: (217) 529-6601 FAX: (217) 529-6644

10773.0000H 6/03 ©1993 Bunn-O-Matic Corporation

www.bunnomatic.com

DAILY CLEANING

CAUTION - CLEAN AND SANITIZE YOUR DISPENSER **DAILY**

1. Thoroughly clean the inner surfaces of the dispenser using a mild cleaner/sanitizer and water solution then thoroughly rinse the dispenser with warm water.

NOTE - Bunn-O-Matic recommends the use of KAY-5® for this purpose. (Kay-5 is a product of the Kay Chemical Company, Greensboro, NC) Simply pour the cleaner/sanitizer into an empty dispenser. Run a complete brew cycle *of just water* into the dispenser and let it set for a minute. Empty the dispenser and thoroughly rinse with warm water.

2. Remove the faucet handle/stem assembly by unscrewing the faucet bonnet just beneath the faucet handle. Use the enclosed cleaning brush to thoroughly clean the inside of the faucet and the faucet shank from inside the dispenser.
3. Disassemble the faucet/stem assembly. The faucet cleaning procedure requires a 3-compartment sink. Thoroughly wash all faucet parts in a mild detergent and water solution in the first sink. Rinse the parts in hot water in the second sink. Sanitize the parts for one minute in 75°F warm chlorine solution (at least 50 ppm) in the third sink. Do **NOT** use full-strength bleach, but a solution with water, of no more than 50 ppm of chlorine. Reassemble the faucet and attach it to the dispenser.
4. Wash the entire outside surface of the dispenser with a clean damp cloth.

CAUTION - NEVER KEEP BREWED ICED BEVERAGES OVERNIGHT

REPLACEMENT PARTS

TDS3 & TDS5 DISPENSERS

1.	03043.0002	Decal, Fresh Brewed Tea
2.	00651.0000	Decal, Bunn
3.	33843.0000	Decal, Cleaning & Sanitizing
4.	00674.0000	Faucet Cleaning Brush
5.	33130.0000	Lid Assy/W Knob
6.	00725.0001	Knob, Lid
7.	02331.0000	Screw for Knob
8.	03093.0002	Faucet Wing Nut
9.	01221.0000	C-Ring, Faucet Shank
10.	03260.0001	Faucet Assy (Includes items 11 thru 15)
	03260.0002	Faucet Assy (Sweet/Unsweet) (Includes items 11 thru 15)
11.	29163.0001	Faucet Handle, Black
	29163.0003	Faucet Handle. Black (Sweet/Unsweet)
12.	00601.0000	Faucet Spring
13.	00600.0000	Faucet Seat Cup
14.	29164.0000	Faucet Stem
15.	29165.0001	Faucet Bonnet, Black
16.	29166.0001	Faucet Repair Kit (Includes items 11 thru 14)
	29166.0002	Faucet Repair Kit (Sweet/Unsweet) (Includes items 11 thru 14)

ICD3 DISPENSERS

1.	21412.0001	Decal, Fresh Brewed Iced Coffee
2.	00651.0000	Decal, Bunn
3.	33843.0000	Decal, Cleaning & Sanitizing
4.	00674.0000	Faucet Cleaning Brush
5.	33130.0000	Lid Assy/W Knob
6.	00725.0001	Knob, Lid
7.	02331.0000	Screw for Lid Knob
8.	03093.0002	Faucet Wing Nut
9.	01221.0000	C-Ring, Faucet Shank
10.	03260.0001	Faucet Assy (Includes items 12 thru 16)
11.	29163.0001	Faucet Handle, Black
12.	00601.0000	Faucet Spring
13.	00600.0000	Faucet Seat Cup
14.	29164.0000	Faucet Stem
15.	29165.0001	Faucet Bonnet, Black
16.	29166.0001	Faucet Repair Kit (Includes items 12 thru 15)

BUNN-O-MATIC COMMERCIAL PRODUCT WARRANTY

Bunn-O-Matic Corp. ("BUNN") warrants equipment manufactured by it as follows:
1) All equipment other than as specified below: 2 years parts and 1 year labor.
2) Electronic circuit and/or control boards: parts and labor for 3 years.
3) Compressors on refrigeration equipment: 5 years parts and 1 year labor.
4) Grinding burrs on coffee grinding equipment to grind coffee to meet original factory screen sieve analysis: parts and labor for 3 years or 30,000 pounds of coffee, whichever comes first.

These warranty periods run from the date of installation BUNN warrants that the equipment manufactured by it will be commercially free of defects in material and workmanship existing at the time of manufacture and appearing within the applicable warranty period. This warranty does not apply to any equipment, component or part that was not manufactured by BUNN or that, in BUNN's judgment, has been affected by misuse, neglect, alteration, improper installation or operation, improper maintenance or repair, damage or casualty. This warranty is conditioned on the Buyer 1) giving BUNN prompt notice of any claim to be made under this warranty by telephone at (217) 529-6601 or by writing to Post Office Box 3227, Springfield, Illinois 62708-3227; 2) if requested by BUNN, shipping the defective equipment prepaid to an authorized BUNN service location; and 3) receiving prior authorization from BUNN that the defective equipment is under warranty.

THE FOREGOING WARRANTY IS EXCLUSIVE AND IS IN LIEU OF ANY OTHER WARRANTY, WRITTEN OR ORAL, EXPRESS OR IMPLIED, INCLUDING, BUT NOT LIMITED TO, ANY IMPLIED WARRANTY OF EITHER MERCHANTABILITY OR FITNESS FOR A PARTICULAR PURPOSE. The agents, dealers or employees of BUNN are not authorized to make modifications to this warranty or to make additional warranties that are binding on BUNN. Accordingly, statements by such individuals, whether oral or written, do not constitute warranties and should not be relied upon.

If BUNN determines in its sole discretion that the equipment does not conform to the warranty, BUNN, at its exclusive option while the equipment is under warranty, shall either 1) provide at no charge replacement parts and/or labor (during the applicable parts and labor warranty periods specified above) to repair the defective components, provided that this repair is done by a BUNN Authorized Service Representative; or 2) shall replace the equipment or refund the purchase price for the equipment.

THE BUYER'S REMEDY AGAINST BUNN FOR THE BREACH OF ANY OBLIGATION ARISING OUT OF THE SALE OF THIS EQUIPMENT, WHETHER DERIVED FROM WARRANTY OR OTHERWISE, SHALL BE LIMITED, AT BUNN'S SOLE OPTION AS SPECIFIED HEREIN, TO REPAIR, REPLACEMENT OR REFUND.

In no event shall BUNN be liable for any other damage or loss, including, but not limited to, lost profits, lost sales, loss of use of equipment, claims of Buyer's customers, cost of capital, cost of down time, cost of substitute equipment, facilities or services, or any other special, incidental or consequential damages.